Clarke®

air

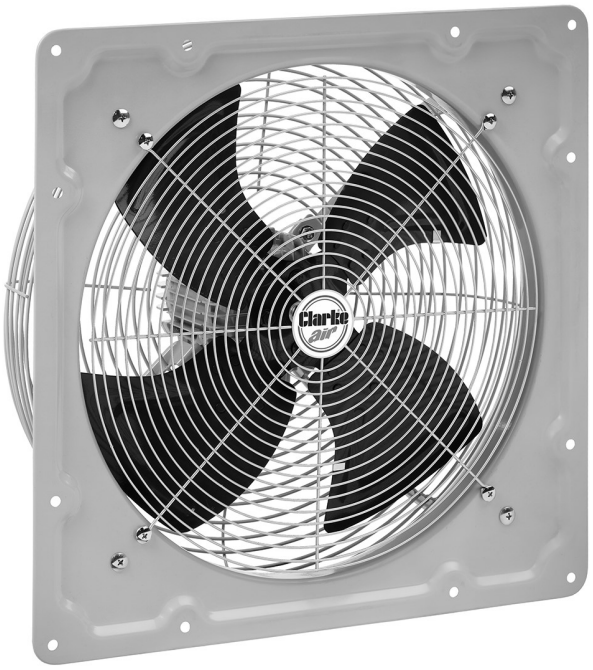

# 20” PLATE AXIAL EXHAUST FAN

## MODEL NO: CAF20

PART NO: 3230492

# OPERATION & MAINTENANCE INSTRUCTIONS

**ORIGINAL INSTRUCTIONS**

DL1025

# INTRODUCTION

Thank you for purchasing this CLARKE Plate Axial Exhaust Fan.

Before attempting to use this product, please read this manual thoroughly and follow the instructions carefully. In doing so you will ensure the safety of yourself and that of others around you, and you can look forward to your purchase giving you long and satisfactory service.

# GUARANTEE

This product is guaranteed against faulty manufacture for a period of 12 months from the date of purchase. Please keep your receipt which will be required as proof of purchase.

This guarantee is invalid if the product is found to have been abused or tampered with in any way, or not used for the purpose for which it was intended.

Faulty goods should be returned to their place of purchase, no product can be returned to us without prior permission.

This guarantee does not effect your statutory rights.

# ENVIRONMENTAL RECYCLING POLICY



Through purchase of this product, the customer is taking on the obligation to deal with the WEEE in accordance with the WEEE regulations in relation to the treatment, recycling & recovery and environmentally sound disposal of the WEEE.

In effect, this means that this product must not be disposed of with general household waste. It must be disposed of according to the laws governing Waste Electrical and Electronic Equipment (WEEE) at a recognized disposal facility.

At the end of its working life, do not dispose of this product or its components with general household waste. Any tools, accessories and packaging should be sorted, taken to a recycling centre and disposed of appropriately.

# GENERAL SAFETY WARNINGS

**NOTE:** This product **DOES NOT** come with a plug, for electrical connectivity please consult pages 4-5 of this manual.

1. Please keep these instructions in a safe place for future reference.
2. **NEVER** carry out any alterations or modifications to this product.
3. **NEVER** carry out any maintenance on this product unless the power has been isolated.
4. Inspect the power cable and plug (if used) for damage and ensure that no connections are loose. **DO NOT** use this unit if it has a damaged supply cable. Any damage should be properly repaired or the part replaced.
5. **DO NOT** use an adaptor plug with earthed (grounded) appliances. Correct plugs and outlets will reduce the risk of electric shock.
6. Position the power cable so that it cannot be inadvertently pulled or pinched and where it does not cause a trip hazard.
7. **NEVER** abuse the mains cable or wrench the cable to disconnect it from the socket. Keep the cable away from sharp edges or hot surfaces.
8. **NEVER** insert anything into the fan grille, unless the power has been isolated.
9. Store or install this product in a dry and secure place out of reach of children.

# ELECTRICAL CONNECTIONS

**WARNING: READ THESE ELECTRICAL SAFETY INSTRUCTIONS THOROUGHLY BEFORE CONNECTING THE PRODUCT TO THE MAINS SUPPLY.**

Before switching the product on, make sure that the voltage of your electricity supply is the same as that indicated on the rating plate. This product is designed to operate on 230VAC 50Hz. Connecting it to any other power source may cause damage.

This product can be used with either a standard plug or a fused connection unit (FCU). If it is necessary to change the fuse in the plug or FCU, the fuse cover must be refitted. If the fuse cover becomes lost or damaged, the plug or FCU must not be used until a suitable replacement is obtained.

If the plug has to be changed because it is not suitable for your socket, or due to damage, a replacement should be fitted, following the wiring instructions shown on page 5. The old plug must be disposed of safely, as insertion into a mains socket could cause an electrical hazard.

If the colours of the wires in the power cable of this product do not correspond with the markings on the terminals of your plug or spur, proceed as follows.

- The **Blue** wire must be connected to the terminal which is marked **N** or coloured **Black**.
- The **Brown** wire must be connected to the terminal which is marked **L** or coloured **Red**.
- The **Yellow and Green** wire must be connected to the terminal which is marked **E**, ⏚ or coloured **Green**.

**Fused Connection Unit (FCU) must be BS1363/4 approved.**

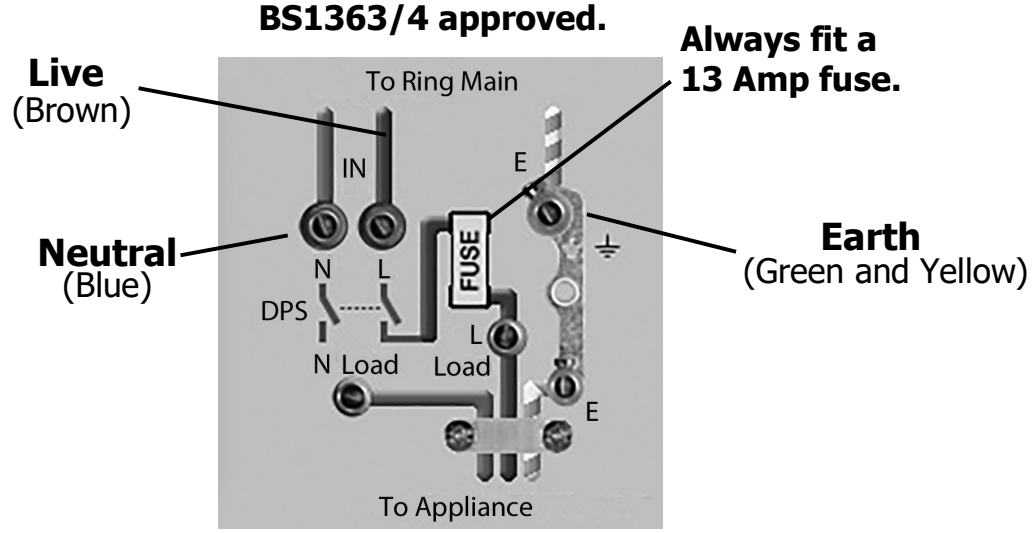


**Ensure that the outer sheath of the cable is firmly held by the clamp**

**Plug must be BS1363/A approved.**

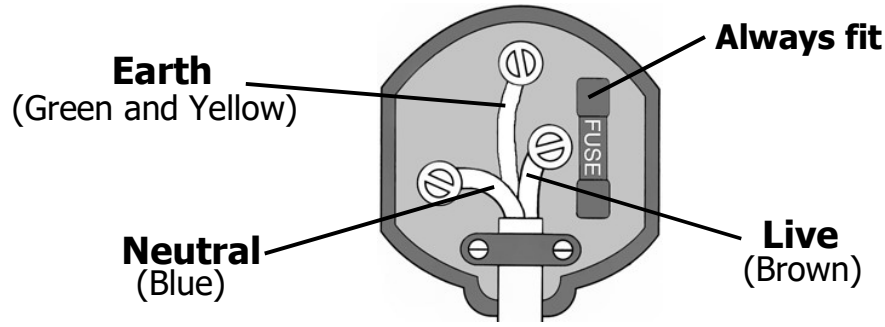


**Ensure that the outer sheath of the cable is firmly held by the clamp**

If in any doubt, consult a qualified electrician.

# INSTALLATION

1. Before installation, ensure that the impeller has not been damaged or distorted during transit.
2. Check that the impeller rotates freely and is secured tightly to the shaft. If the tip clearance of the blades is not sufficient slacken the motor bolts and re-align.
3. Mount the fan securely using 4 bolt/screw holes provided in the outer casing. Using the other 4 bolt holes and appropriate length bolts, the fan can be aligned and secured with the corresponding sized external louvre vent (see below).
4. Ensure that the installation is free from any vibration which could damage the impeller or motor bearings.
5. Ensure that when installed the impeller side of the fan cannot be touched.
6. For safety and security a Louvre shutter/vent should be installed on the external wall. These can be purchased from your local CLARKE retailer.

| MODEL NO. | DESCRIPTION | PART NO. | |
|---|---|---|---|
| CL12 | 12" Louvre Vent | 3230494 |  |
| CL16 | 16" Louvre Vent | 3230495 | |
| CL20 | 20" Louvre Vent | 3230496 | |
| CL24 | 24" Louvre Vent | 3230497 | |

7. Refer to the section on electrical connection on pages 4-5 for guidance on wiring. If in any doubt, consult a qualified electrician.

# MAINTENANCE

Before carrying out any maintenance, always make sure that the power has been isolated.

1. Check that the impeller and motor bolts and nuts are fully tightened within the first 100 hours of use and periodically after this.
2. Ensure that the impeller, motor and fan housing are kept clean. This is important for the ongoing safe use of this fan.
3. Periodically check that the fan installation is free from corrosion.
4. If not installed, store in a dry place protected from the weather.
5. **DO NOT** attempt any repairs yourself, always consult a qualified electrician or contact the CLARKE service department.

Your CLARKE fan has been designed to give long and trouble free service. If, however, having followed the instructions in this booklet carefully, you encounter problems, take the unit to your local CLARKE dealer.

# TECHNICAL DATA

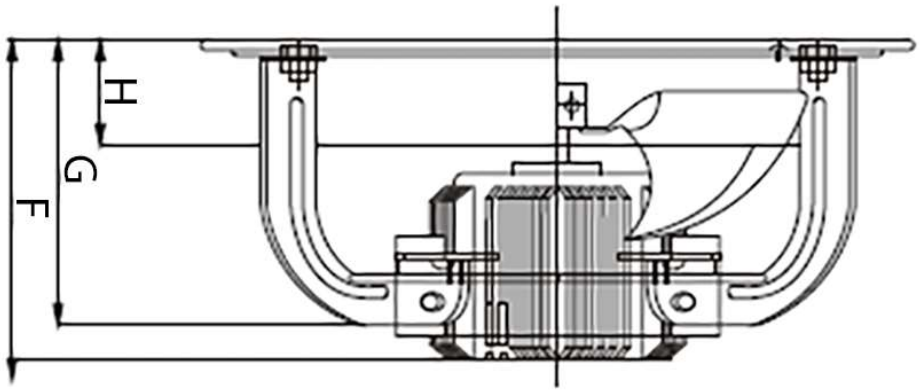


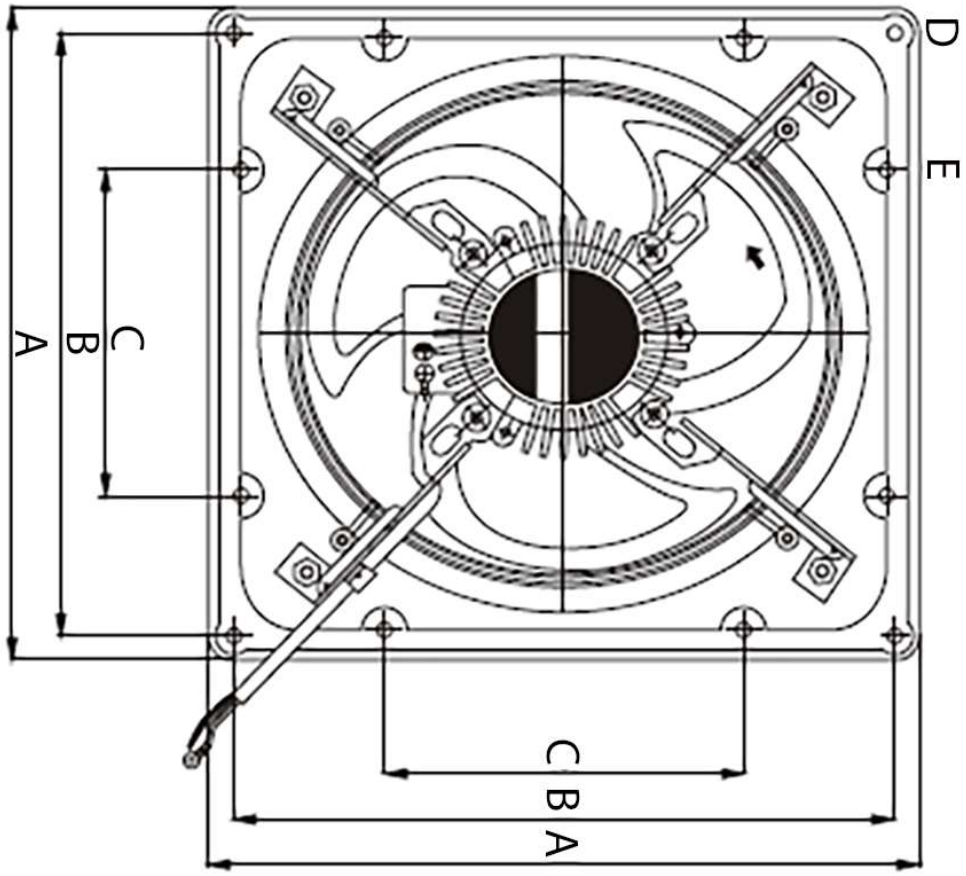


| Model | A | B | C | D | E | F | G | H |
|---|---|---|---|---|---|---|---|---|
| **CAF20** | 600mm | 560mm | 293mm | 10mm | 10mm | 258mm | 205mm | 85mm |

# DIAGRAM

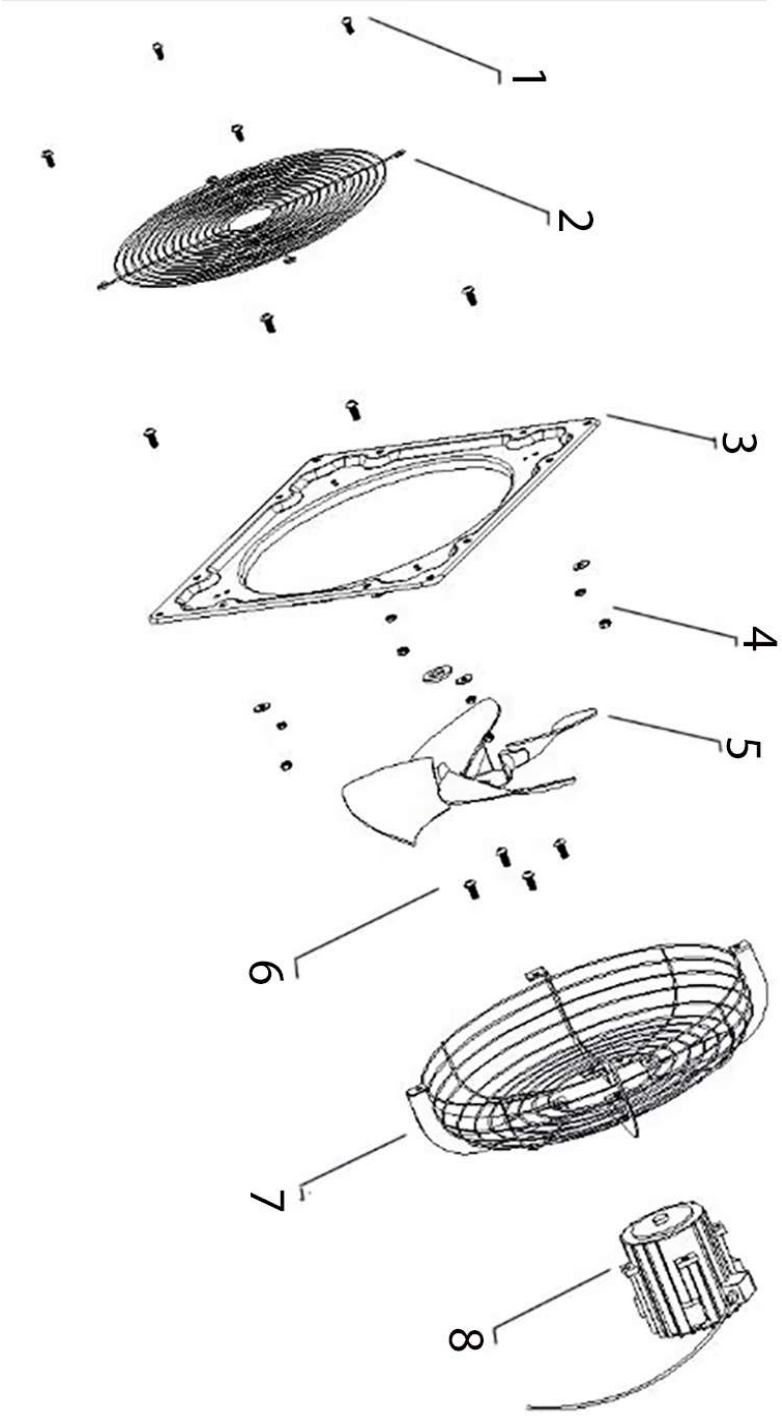


| No | Part | | No | Part |
|---|---|---|---|---|
| 1 | Screw | | 5 | Impeller |
| 2 | Safety Grille | | 6 | Motor Screw |
| 3 | Frame | | 7 | Safety Grille |
| 4 | Impeller Screw | | 8 | Motor |

# TECHNICAL SPECIFICATIONS

| Model | **CAF20** |
|---|---|
| Impeller Size | 500mm (20”) |
| Voltage/Frequency | 230 Volts/50 Hz |
| Power Cable | 3 Core x 1.0mm$^2$ x 1.5m |
| Electrical Insulation Class | Class I |
| Speed | 1400 rpm |
| Power Input | 280 Watts |
| Rated Input Ampage | 1.2A |
| Service Value | 0.39m$^3$/min/W |
| Standby Power Consumption | N/A |
| Fan Sound Power Level | 65dB (A) |
| Airflow at Optimum Energy Efficiency | 110m$^3$/min |
| Static Pressure at Optimum Efficiency | 100pa |
| Operating Temperature | -15°C ~ 40°C (5°F ~ 104°F) |
| Weight | 14.5 kg |
| IP Rating | IP54 |

# ERP - THE FOLLOWING TABLE ADDRESSES THE INFORMATION REQUIREMENTS OF REG.327/2011

| **Model** | **CAF20** | | |
|---|---|---|---|
| **Description** | **Symbol** | **Value** | **Unit** |
| Overall Efficiency | - | 64.10 | % |
| Measurement Category | - | B | A,B,C or D |
| Efficiency Category | - | Total | Static/Total |
| Efficiency Grade | - | N = 58 | - |
| Efficiency Calculation with VSD | - | Without VSD | - |
| Variable Speed Drive | - | No | Yes/No |
| Rated Flow Rate at Optimum Energy Efficiency | F | 6600 | $m^3/hr$ |
| Rated Motor Power input at Optimum Energy Efficiency | P | 280 | W |
| Rated Pressure Rate at Optimum Energy Efficiency | Pa | 100 | Pa |
| Rotations Per Minute at Optimum Energy Efficiency | RPM | 1400 | RPM |
| The "Specific Ratio" (EU No 327/2011) | - | N/A | - |
| Recycling Information | Adhere to WEEE standards | | |
| Contact Details for Obtaining More Information | Clarke International<br>Hemnall Street, Epping, Essex, CM16 4LG<br>service@clarkeinternational.com Tel: 0208 988 7400 | | |

# DECLARATION OF CONFORMITY

UK CA

Clarke® INTERNATIONAL

Hemnall Street, Epping, Essex, CM16 4LG

## DECLARATION OF CONFORMITY

**This is an important document and should be retained.**

**We hereby declare that this product(s) complies with the following legislation:**

| | |
|---|---|
| *2009/125/EC* | *Ecodesign Directive* |
| *2014/30/EU* | *Electromagnetic Compatibility Directive* |
| *2014/35/EU* | *Low Voltage Directive* |
| *2011/65/EU* | *Restriction of Hazardous Substances (RoHS) Directive* |

**The following standards have been applied to the product(s):**

*EN 60034-5:2001+A1, IEC 62321-5:2013, IEC 62321-6:2015, IEC 62321-8:2017, EN 60034-1:2010, IEC 62321-4:2013+AMD1:2017, EN ISO 17075-1:2017, IEC 62321-7-1:2015, IEC 62321-7-2:2017, IEC 62321-3-1:2013*

The technical documentation required to demonstrate that the product(s) meet(s) the requirement(s) of the aforementioned legislation has been compiled and is available for inspection by the relevant enforcement authorities.

**The UKCA mark was first applied in:** 2025

**Product Description:** Ventilator Plate Fan

**Model Number(s):** CAF20

**Serial/Batch Number:** Refer to product/packaging label

**Date of Issue:** 22/08/2025

**Signed:**

**J.A Clarke**

**Director**



CE

Clarke® INTERNATIONAL

Fitzwilliam Hall, Fitzwilliam Place, Dublin 2

## DECLARATION OF CONFORMITY

**This is an important document and should be retained.**

**We hereby declare that this product(s) complies with the following legislation:**

| | |
|---|---|
| *2009/125/EC* | *Ecodesign Directive* |
| *2014/30/EU* | *Electromagnetic Compatibility Directive* |
| *2014/35/EU* | *Low Voltage Directive* |
| *2011/65/EU* | *Restriction of Hazardous Substances (RoHS) Directive* |

**The following standards have been applied to the product(s):**

*EN 60034-5:2001+A1, IEC 62321-5:2013, IEC 62321-6:2015, IEC 62321-8:2017, EN 60034-1:2010, IEC 62321-4:2013+AMD1:2017, EN ISO 17075-1:2017, IEC 62321-7-1:2015, IEC 62321-7-2:2017, IEC 62321-3-1:2013*

The technical documentation required to demonstrate that the product(s) meet(s) the requirement(s) of the aforementioned legislation has been compiled and is available for inspection by the relevant enforcement authorities.

**The CE mark was first applied in:** 2025

**Product Description:** Ventilator Plate Fan

**Model Number(s):** CAF20

**Serial/Batch Number:** Refer to product/packaging label

**Date of Issue:** 22/08/2025

**Signed:**

**J.A Clarke**

**Director**





Parts & Service: 020 8988 7400 / E-mail: Parts@clarkeinternational.com or Service@clarkeinternational.com

# A SELECTION FROM THE VAST RANGE OF

Clarke®

## QUALITY PRODUCTS

















**AIR COMPRESSORS**
From DIY to industrial, Plus air tools, spray guns and accessories.

**GENERATORS**
Prime duty or emergency standby for business, home and leisure.

**POWER WASHERS**
Hot and cold, electric and engine driven - we have what you need

**WELDERS**
Mig, Arc, Tig and Spot.
From DIY to auto/industrial.

**METALWORKING**
Drills, grinders and saws for DIY and professional use.

**WOODWORKING**
Saws, sanders, lathes, mortisers and dust extraction.

**HYDRAULICS**
Cranes, body repair kits, transmission jacks for all types of workshop use.

**WATER PUMPS**
Submersible, electric and engine driven for DIY, agriculture and industry.

**POWER TOOLS**
Angle grinders, cordless drill sets, saws and sanders.

**STARTERS/CHARGERS**
All sizes for car and commercial use.

# PARTS & SERVICE:
# 0208 988 7400

**Parts Enquiries**
Parts@clarkeinternational.com

**Servicing & Technical Enquiries**
Service@clarkeinternational.com

**SALES: UK 01992 565333 or Export 00 44 (0)1992 565335**

Clarke® INTERNATIONAL Hemnall Street, Epping, Essex CM16 4LG
www.clarkeinternational.com